CADENAS INOX TRANSIT2

THIRARD

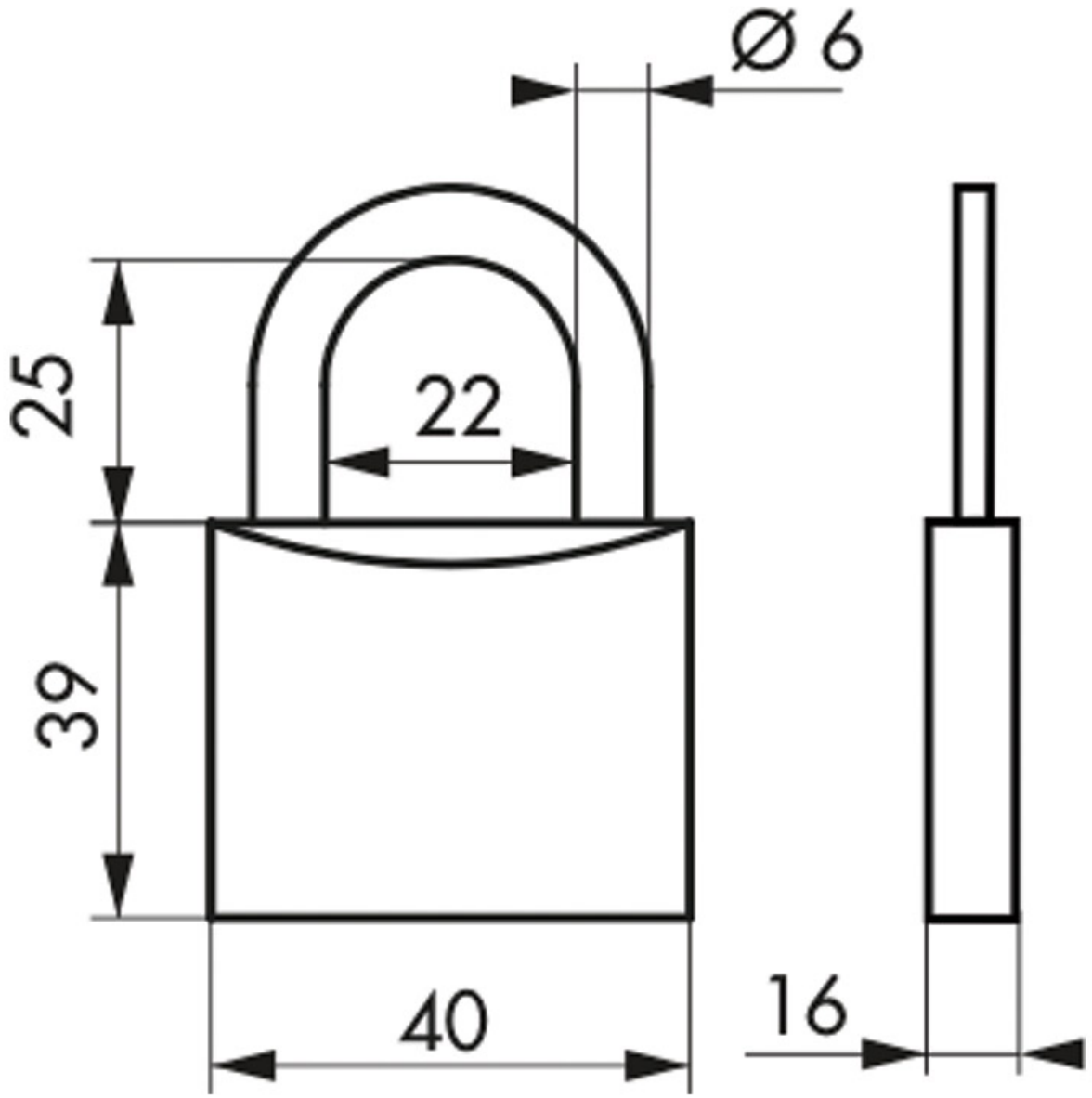

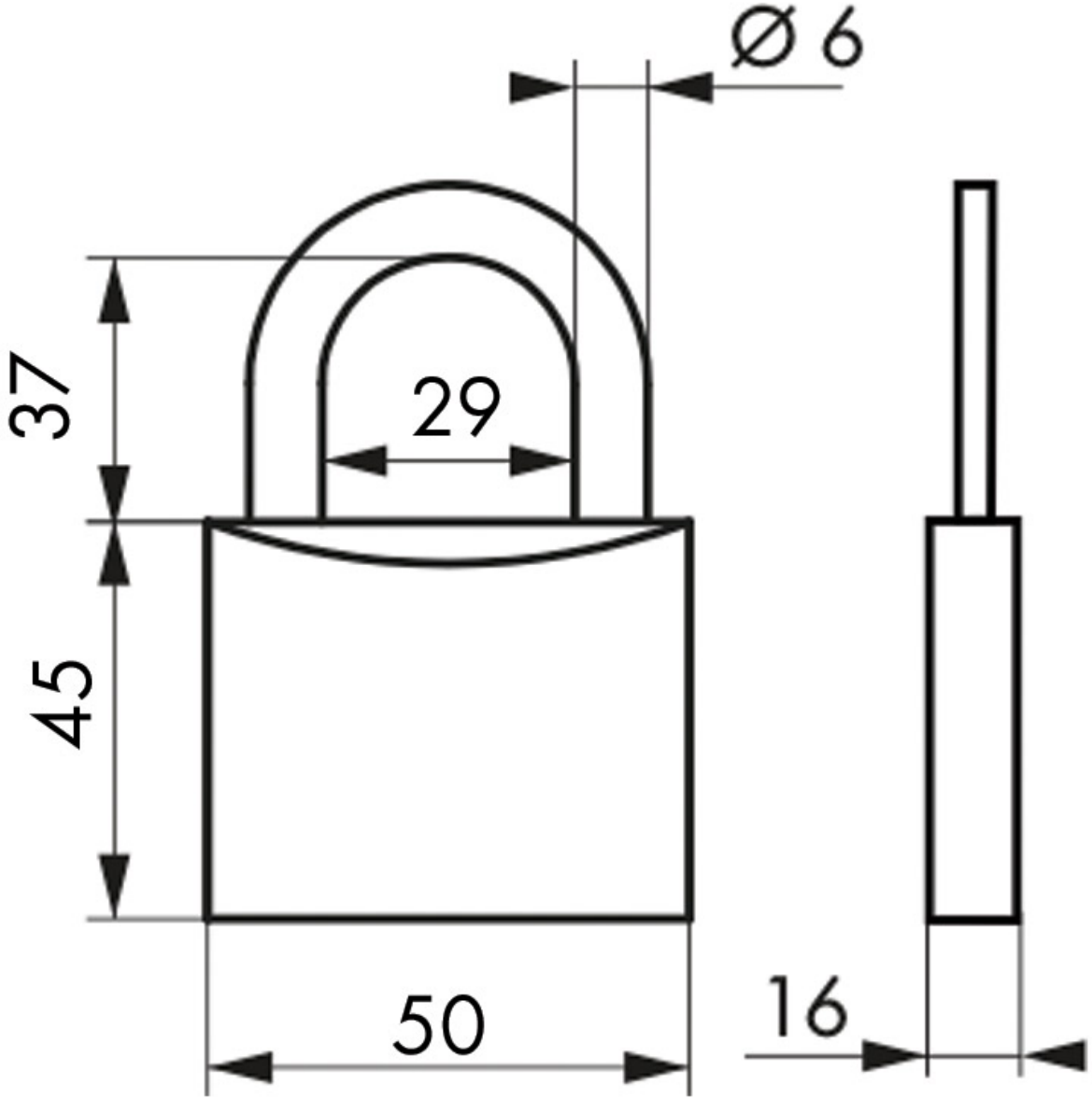
Ø 6
37
29
45
50
16