CONSOLE SERRE LIVRES
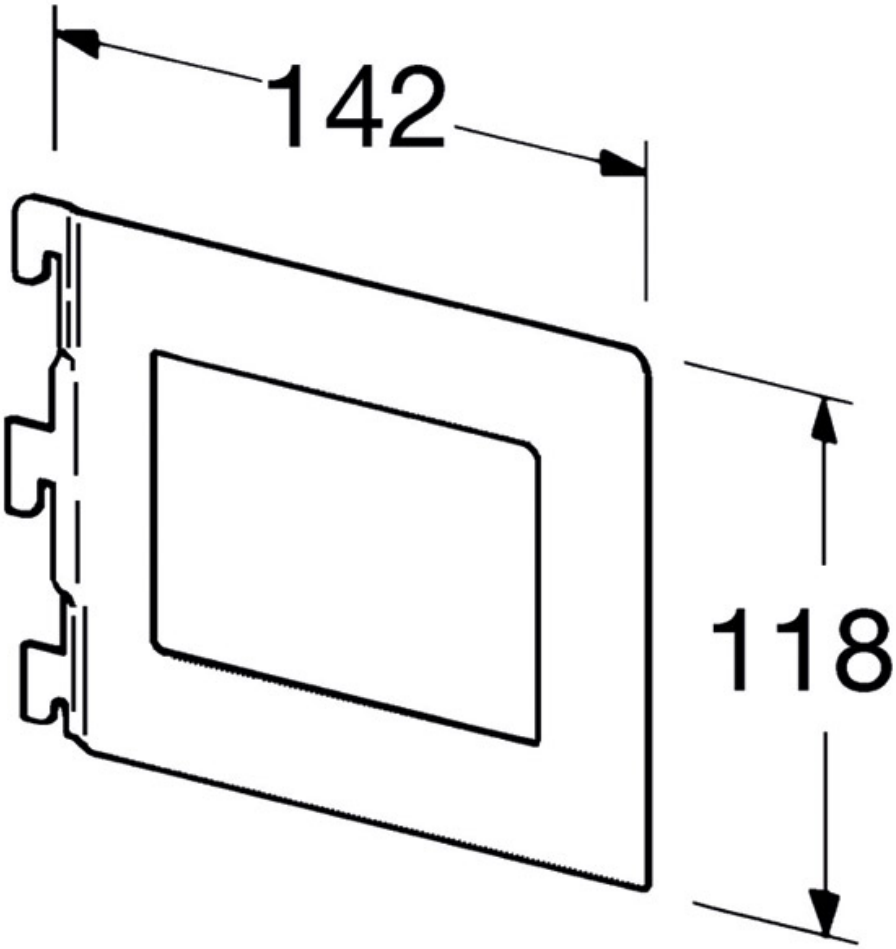
ELEMENT SYSTEM