SPOT POWERLITE PLUS
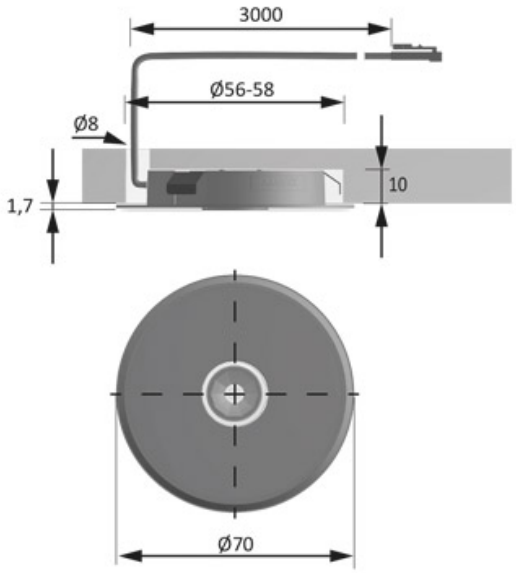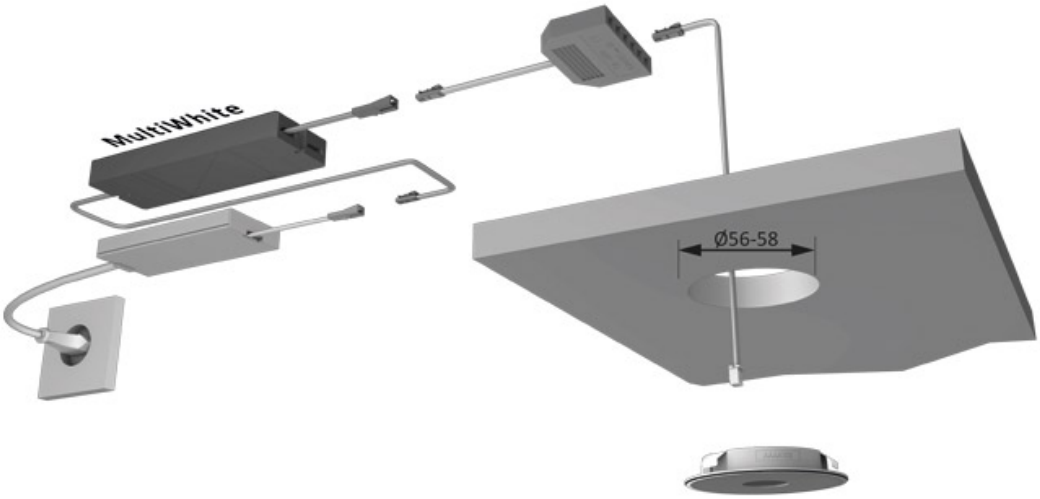
HALEMEIER